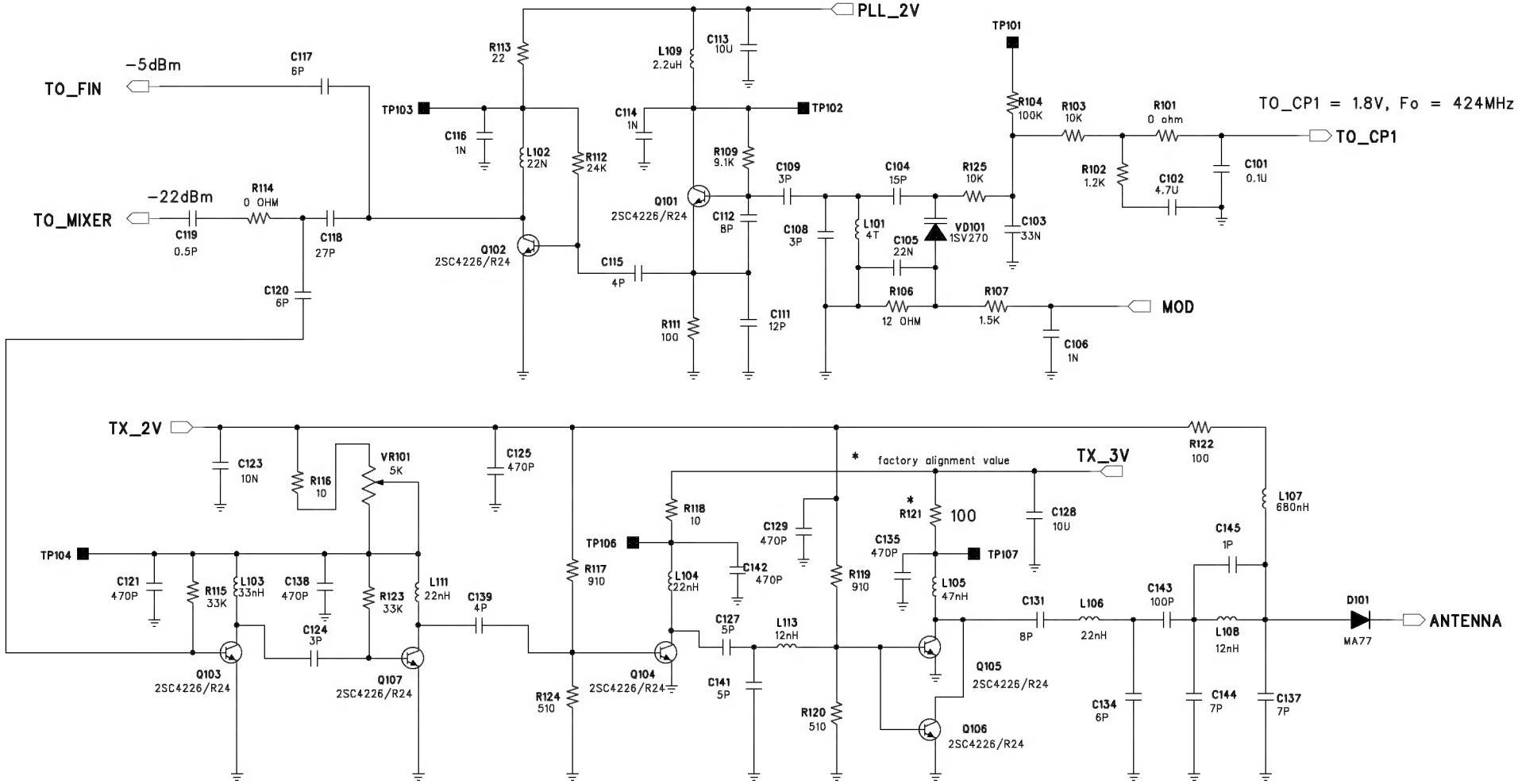

DRAWN: SCH	DATED: 10.11.98	COMPANY: Albrecht Electronic GmbH	REV: 1.0
		TITLE: Sporty Pro 69 PLL & TX board	
CHECKED:	DATED:	CODE: H245 / DRAWING NO:	
		SHEET: 1 OF 1	